INF119 High level view

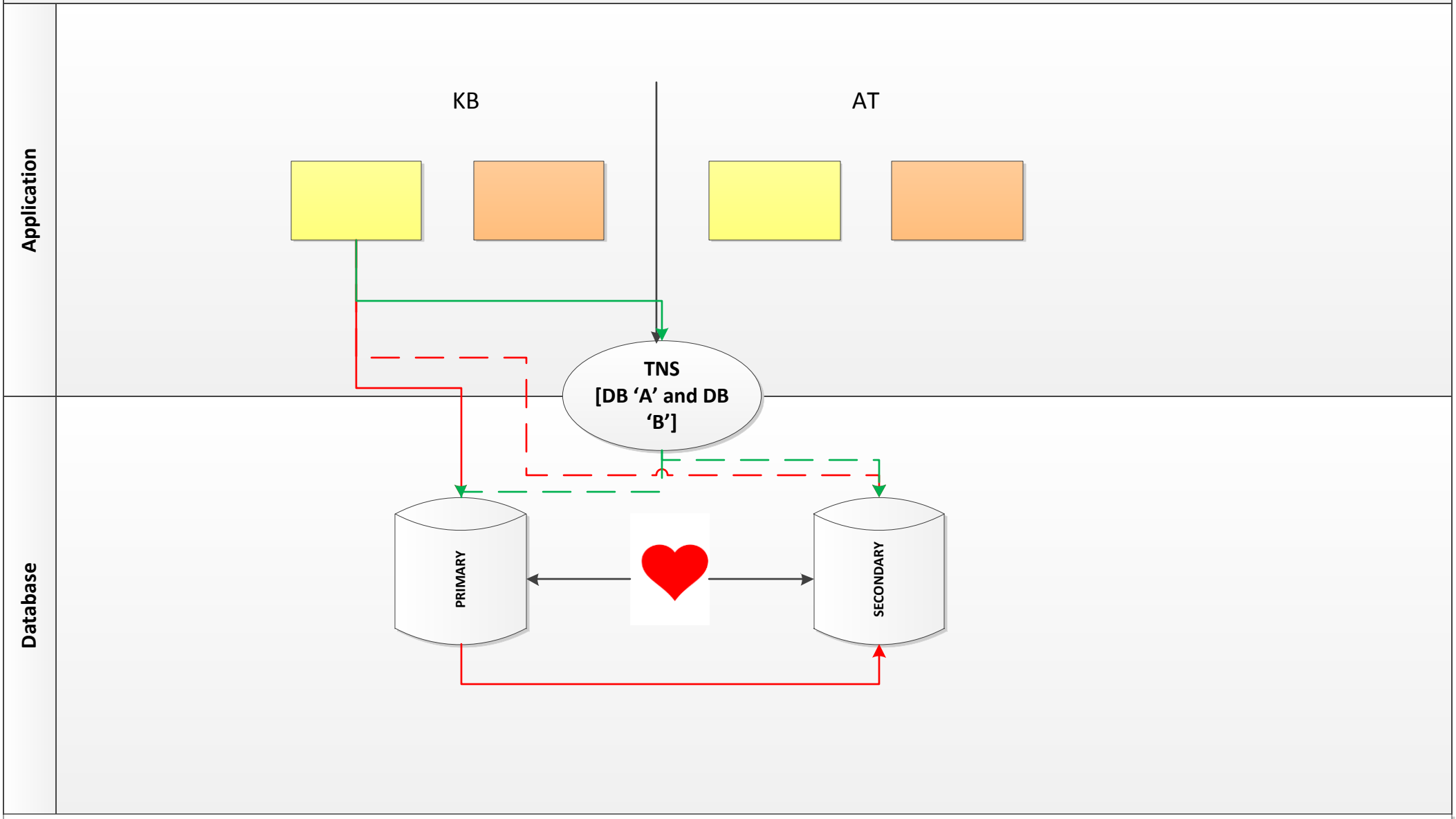

Decision Tree and Activate Failover Button